RF AND BEAM DIAGNOSTIC INSTRUMENTATION AT THE ADVANCED PHOTON SOURCE (APS) LINEAR ACCELERATOR (LINAC)

CONF-9608123--30 ANL/ASD/CP--89701

RECEIVED SEP 19 1996 OSTI

A. E. Grelick, R. Fuja, N. Arnold, M. White
Argonne National Laboratory, 9700 South Cass Avenue, Argonne, IL 60439-4800 USA

Abstract

A system of beam diagnostics and rf phase and amplitude measurement, based mostly on VXI, was implemented at the APS Linac and has now operated successfully for more than two years. Standardization of instrumentation among the various APS accelerators accounted for some of the non-VXI packaged equipment that was used. Equipment for which the optimum topology or location did not lend itself to VXI was also accommodated so as to yield the greatest stability, reliability, and flexibility.

The APS Linac instrumentation is described, and operational performance is discussed. Future plans, including an expansion to include a switchable spare klystron (which can be accommodated with only minor changes to the VXI-housed equipment) and a beam position monitor using frequency domain analysis to provide improved determination of positron position in a mixed-particle beam condition are also discussed.

Introduction

The Advanced Photon Source [1] linear accelerator system consists of a 200-MeV, 2856-MHz S-band electron linac and a 2-radiation-thick tungsten target followed by a 450-MeV positron linac.

The VXI-based instrumentation includes rf phase and amplitude measurements and beam position monitors (BPMs), that use outboard down-conversion. Monitoring of beam current, Faraday cups, and slits is VME-based, following the APS standard. Loss monitors and average current monitors use other types of packaging. A fifth-harmonic cavity, used as a bunch monitor, was successfully tested but has not yet been set up for operational use.

Fluorescent screens and related image processing constitute a separately controlled subsystem and are discussed elsewhere [2,3].

Equipment Topology

The rf schematic for the APS linac is shown in Figure 1. Linac sectors are comprised of a klystron and associated accelerating structures. Three sectors incorporate SLED cavity pulse compression. The principal phase measurement is made at the SLED output or at the klystron output in sectors without SLEDs. Multiplexed phase measurements are available for other forward power samples, including at the input and output of each accelerating structure. Envelope detector channels are provided for almost all of these signals and for reflected power signals as well.

Each accelerating structure has its own loss monitor.

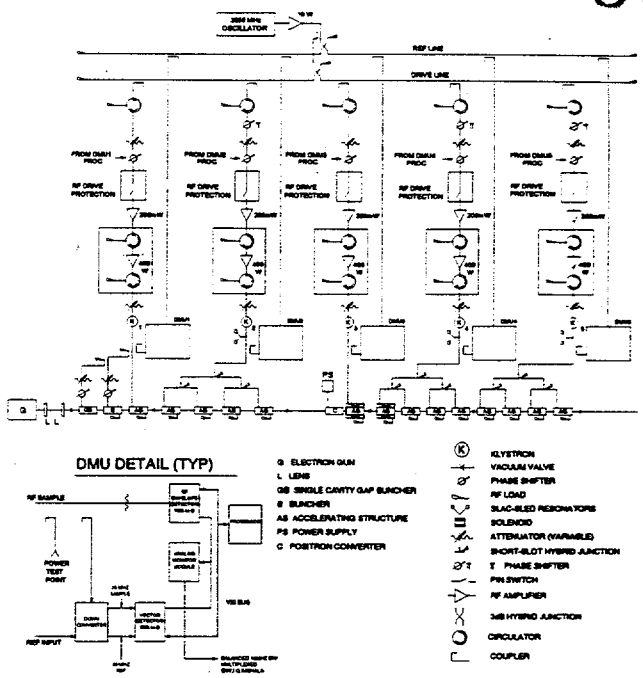

Fig. 1. The linac rf diagram, showing the division by klystron into five sectors.

There are three wall-current monitors in the linac. Two are located in the electron linac and the third is at the end of the positron linac.

Six BPMs are installed in the electron linac, one downstream of each accelerating structure and one in the diagnostic line following the electron linac analyzing magnet. Seven BPMs are installed in the positron linac, one downstream of six of the last seven accelerating structures and one in the diagnostic line following the positron linac analyzing magnet.

Equipment Description

The VXI data collection modules were designed by Los Alamos National Laboratory (LANL) [4] with upgrades accomplished collaboratively by LANL and Argonne National Laboratory (ANL). A common digital interface exists on all modules, while three types of on-card signal conditioning allow measurements of rf amplitude, rf phase, and beam position. Each channel digitizes a single measurement during each linac pulse. Each module can also be commanded by software to put analog signals onto either or both sets of designated local bus lines on the backplane.

Analog-to-digital conversion in all modules is done by a Datel SHM-49 hybrid track/hold amplifier and an AD574, 12-bit, monolithic analog-to-digital converter, yielding a 10-MHz bandwidth.

DISTRIBUTION OF THIS DOCUMENT IS UNLIMITED

MASTER

The submitted manuscript has been authored by a contractor of the U. S. Government under contract No. W-31-109-ENG-38. Accordingly, the U. S. Government retains a nonexclusive, royalty-free license to publish or reproduce the published form of this contribution, or allow others to do so, for U. S. Government purposes.

DISCLAIMER

Portions of this document may be illegible in electronic image products. Images are produced from the best available original document.

DISCLAIMER

This report was prepared as an account of work sponsored by an agency of the United States Government. Neither the United States Government nor any agency thereof, nor any of their employees, makes any warranty, express or implied, or assumes any legal liability or responsibility for the accuracy, completeness, or usefulness of any information, apparatus, product, or process disclosed, or represents that its use would not infringe privately owned rights. Reference herein to any specific commercial product, process, or service by trade name, trademark, manufacturer, or otherwise does not necessarily constitute or imply its endorsement, recommendation, or favoring by the United States Government or any agency thereof. The views and opinions of authors expressed herein do not necessarily state or reflect those of the United States Government or any agency thereof.

The VXI data collection and conversion modules used for each type of measurement are described below.

Phase Measurement

A down converter module driving a vector detector module (VDM) produces two channels of I and Q waveforms and digital data. The VDM operates at 20 MHz and uses two insulated, ovenized, I/Q demodulator assemblies. Phase is calculated by software and can be plotted by on-line sweeping of the sampling time. A phase between −180° and +180°, with a resolution of 0.01°, is computed from measured I and Q data. The smaller in magnitude of I and Q is always used as the numerator in the computation to avoid losing precision near the sine wave maxima. Line-stretcher type phase shifters are included at the reference inputs of each sector's phase measuring modules. These phase shifters are set so that the phase reading of each sector can be set to approximately +90° at maximum energy conditions for electrons. There are two advantages to this choice. +90° is a point where phase is calculated as:

$$\cos^{-1}\left\{\frac{I^2}{\sqrt{I^2+Q^2}}\right\} ,$$

where I is near zero and the I channel has a lower noise level than the Q channel. In addition, the readings for electrons at +90° and positrons at roughly −90° will not fall near the point of discontinuous readings located at ± 180°.

Amplitude Measurement

Envelope detector modules provide eight channels of diode-detected signals. Linearized values for each possible raw output value from the analog-to-digital converter, interpolated from calibration of 88 points per channel, are stored in an EEPROM.

Beam Position Monitor

A logarithmic amplifier electronics system is used with stripline BPMs to measure electron and positron beam positions at the APS linac. Stripline-type BPMs were chosen because they provide −5 dBm of peak signal from the 8-mA positron beam.

The electronics can be subdivided into two sections, a downconverter section and a logarithmic amplifier section. Both the external downconverter and the 70-MHz logarithmic amplifier BPM VXI module have eight channels to accommodate two sets of horizontal and vertical stripline signals.

The downconverter section consists of a 2.856 GHz-to-70 MHz downconverter followed by a 70-MHz bandpass filter and amplifier. The bandpass filter stretches the 30-ns pulse to around 200 ns and reduces its amplitude by some 13 dB. This 70-MHz signal is used as the input to a cascaded chain of logarithmic amplifiers consisting of two Analog Devices AD640 with their video bandwidths set to 7 MHz. Beam position is calculated from the relative stripline signal amplitudes. With the signal-to-noise ratio at the input to the logarithmic amplifier circuits approaching 75 dB, resolutions of 1 μm should be possible [5].

Timing and Software Peak Detection

A different trigger timing system than the one used at LANL is used for most measurements in the APS linac and improves resolution and jitter by more than an order of magnitude. The upgraded LANL modules allow any of the VXI backplane triggers to be directly selected, or the LANL default triggering system can still be used. A VXI trigger module, designed at ANL, contains a set of eight-bit programmable delay lines that can be used to select sample time in increments of 5 nanoseconds. A separate delay line controls each of the two ECL triggers and eight TTL triggers on the VXI backplane. Software peak detection by scanning is available for all signals. Time scans are automated and replace the hardware peak detecting circuits that are commonly used. A typical SLED waveform time scan is shown in Figure 2.

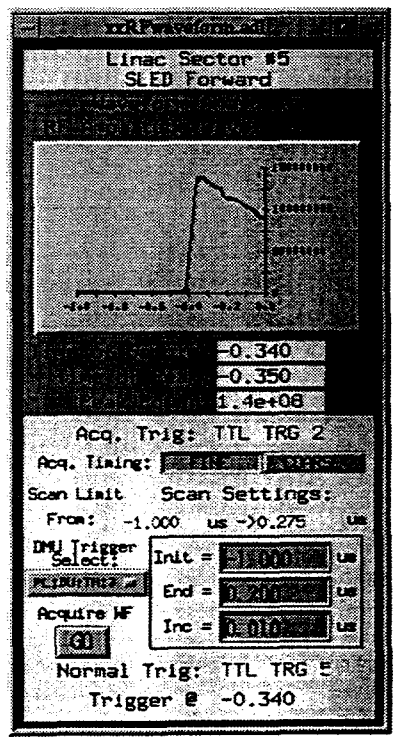

Fig. 2. A typical SLED waveform timescan.

Non-VXI Diagnostics

Wall current monitors are based on a design previously used at Fermilab [6]. The signals from current monitors, Faraday cups, and slits are processed with a VME-packaged, high-speed gated integrator [7].

The loss monitors use a design that is standard throughout the APS, in which a 500-V power supply energizes a 7/8-inch air-dielectric coaxial cable that is used as an ionization chamber. A signal processing chassis contains multiplexers, optical isolators, and current-to-voltage amplifiers. A voltage proportional to the average

- beam loss in the monitored accelerating structure is digitized in a VME module [8].

Performance

The phase detection modules have achieved 0.1 degree average repeatability. Operating performance has supported closed-loop operation with as little as 0.5 degree dead zone.

Envelope detectors used in amplitude measurement have been repeatably calibrated to within 0.2 dB of a standard. Operational performance has been somewhat inconsistent, however, and errors of 0.5 dB have been reported. Some of this is due to trigger timing errors, and there is an ongoing effort to provide more specific timing for each signal.

Operational BPM resolution is acceptable at 53 μm, and loss monitor sensitivity is at least 4.2 pA/pC with 0.3 s minimum averaging time.

Future Plans

A system which will provide switching of a sixth klystron and modulator in place of any of the basic five is under design. Figure 3 is a layout of the most probable topology for accomplishing the switching. Additional waveguide bi-directional couplers are being added to the two sectors without SLEDs so that the principal phase measurement will be made at the input to each sector, independent of which klystron is actually driving that sector. SLEDed sectors are already compliant, as the measurements are made at the SLED output. As a result, only very minor changes to the phase measuring system will be required.

A new BPM system that gives information on the polarity of the charged particle producing the signal (electron or positron) has been developed, and will provide for much improved positron diagnostics capability [9]. The new design takes advantage of the fact that electrons and positrons have different phase relationships between odd and even order frequency components by detecting I and Q separately for fundamental and second harmonic components of the stripline signals. A prototype is under development.

Conclusions

The instrumentation has supported the successful operation of the APS Linac. Improvements in accuracy, resolution, and convenience of remote readout are continuing as needs are identified.

Acknowledgments

Work is supported by the U. S. Department of Energy, Office of Basic Sciences under the Contract W-31-109-ENG-38. We sincerely acknowledge the efforts of C. Gold, D. Jefferson, J. Stevens, and J. Hawkins, whose efforts in support of the linac instrumentation were essential to the successful results. We gratefully acknowledge D. Haid for graphics assistance.

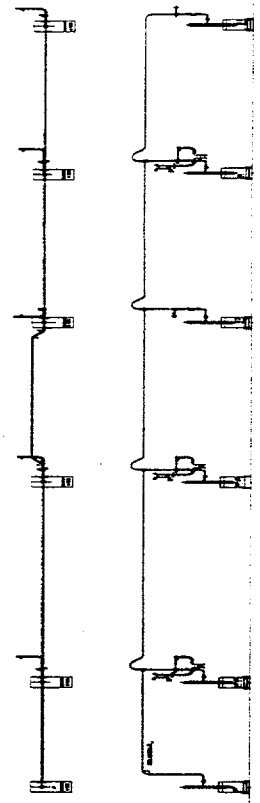

Fig. 3. The mechanical layout for switching in the spare klystron.

References

[1] 7-GeV Advanced Photon Source Conceptual Design Report, ANL-87-15, April 1987.

[2] M. White et al., "Construction, Commissioning, and Operational Experience of the Advanced Photon Source (APS) Linear Accelerator, " these proceedings.

[3] W. Berg and K. Ko, "Status of the Fluorescent Screens and Image Processing for the APS Linac, " Beam Instrumentation Workshop Proc., Santa Fe, NM, Oct. 1993.

[4] S. P. Jachim et al, "The Los Alamos VXI-Based Modular RF Control System," 1993 Particle Accelerator Conference Proc., Washington, DC., May 1993, pp. 1154-1156 (1993).

[5] R. E. Fuja and M. White, "Performance of the Advanced Photon Source (APS) Linac Beam Position Monitors (BPMs) with Logarithmic Amplifier Electronics," 1995 Particle Accelerator Conference Proc., Dallas, TX, 1-5 May 1995, pp. 2595-2597 (1996).

[6] R. C. Webber, "An Introduction to the Concept and Survey of Measurement Techniques Including Design of a Wall Current Monitor," AIP First Accelerator Instrumentation Workshop Proc., Upton, NY, 1989, pp. 85-126 (1990).

[7] X. Wang, "Ultrafast, High Precision Gated Integrator," AIP Sixth Beam Instrumentation Workshop Proc., Vancouver, BC, 1994, pp. 260-266 (1995).

[8] D. R. Patterson, "Design and Performance of the Beam Loss Monitor System for the Advanced Photon Source, " AIP Sixth Beam Instrumentation Workshop Proc., Vancouver, BC, 1994, pp. 300-306 (1995).

[9] N. S. Sereno, R. Fuja, "Positron Beam Position Measurement for a Beam Containing Both Positrons and Electrons," AIP Seventh Beam Instrumentation Workshop Proceedings," Argonne, IL, May 1996, to be published.